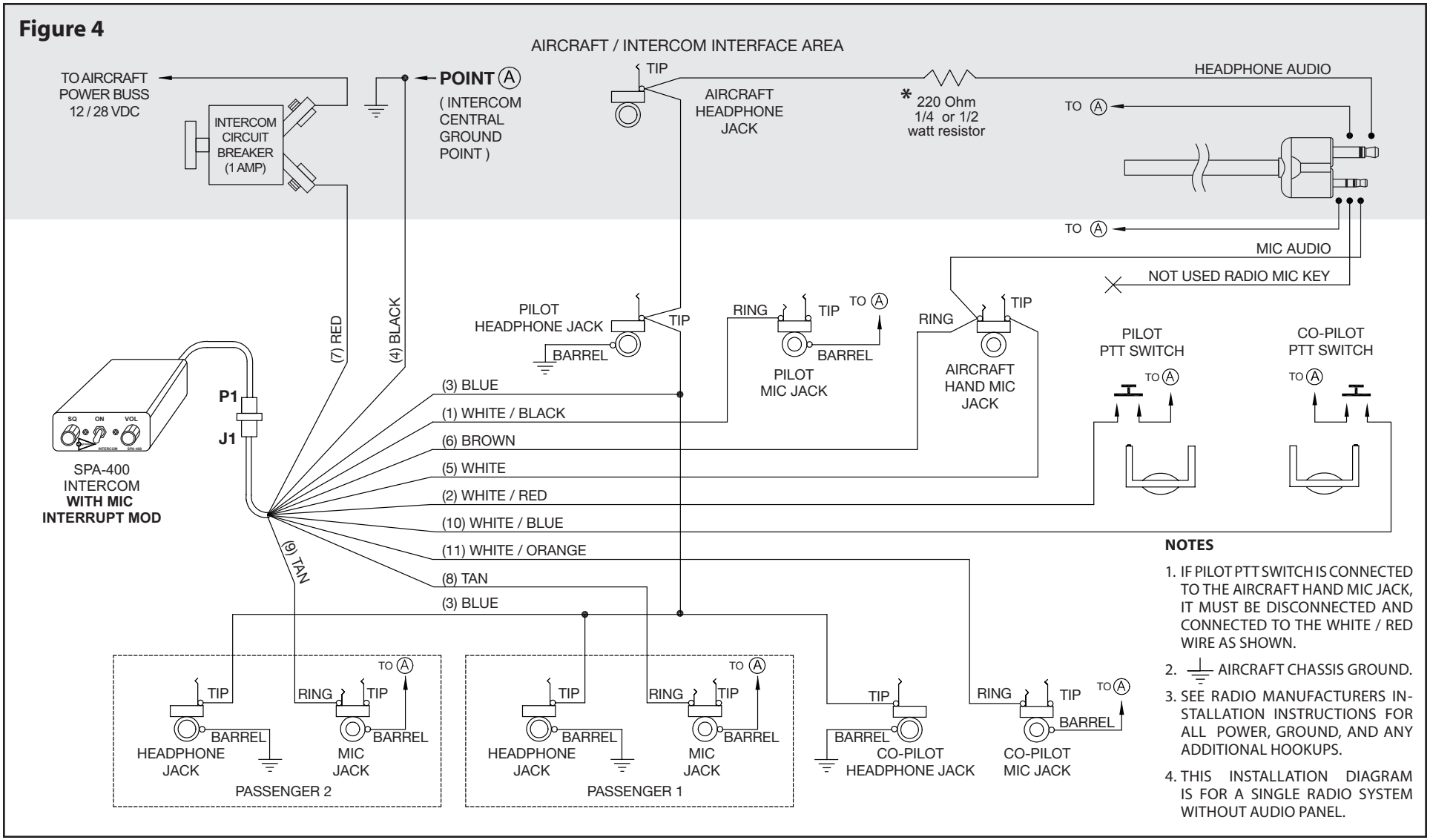

SPA-400 – ICOM A20, A21 Radio Installation Wiring Diagram

*** ICS Load Modification**
For more information about this resistor mod see the ICS Load Modification instructions.
File Name: **ICS-Load_1440_Mod.pdf**

Sigtronics Corporation
178 East Arrow Highway
San Dimas, CA 91773

Telephone: (909) 305-9399
E-mail: info@sigtronics.com
Web: www.sigtronics.com